DIGITAL PROJECTOR

MX722

Features

- Native XGA (1024 x 768) Resolution
- 4,000 ANSI Lumens, 5,300:1 Contrast Ratio
- Various 3D Format Support, Instant Restart
- Built-in Speakers (10W x 2), Eco Blank
- LAN Control and LAN Display Function

Input and Output Terminals

1. LAN (RJ45)
2. USB (Type Mini B)
3. RS232 (DB-9pin)
4. HDMI
5. Monitor Out (D-sub 15pin)
6. Computer In 1 & 2 (D-sub 15pin)
7. S-Video In (Mini DIN 4pin)
8. Audio In L/R (RCA)
9. Audio In 1 & 2 (Mini Jack)
10. Composite Video in (RCA)
11. DC 12V Trigger
12. Audio Out (Mini Jack)
13. Microphone

Specifications

Projection System	DLP®
Native Resolution	XGA(1024x768)
Brightness	4,000AL
Contrast Ratio	5,300:1
Display Color	1.07 Billion Colors
Lens	F2.59-2.87, f=16.88-21.88mm
Aspect Ratio	Native 4:3 (5 aspect ratio selectable)
Throw Ratio	1.51-1.97(65"@ 2m)
Image Size (Diagonal)	37"~300"
Zoom Ratio	1.3:1
Lamp Type	300W
Lamp Life	2000/3000/NA hours
Keystone Adjustment	1D, Vertical +/- 40 degrees
Projection Offset	115%±5%
Resolution Support	VGA(640 x 480) to UXGA(1600 x 1200)
Horizontal Frequency	15-102KHz
Vertical Scan Rate	23-120Hz
Compatibility	HDTV Compatibility: 480i, 480p, 576i, 576p, 720p, 1080i, 1080p Video Compatibility: NTSC, PAL, SECAM
Interface	Computer in (D-sub 15pin) x 2(Share with component) Monitor out (D-sub 15pin) x 1 Composite Video in (RCA) x 1 S-Video in (Mini DIN 4pin) x 1 HDMI x 1 Audio in (Mini Jack) x 2 Audio in (L/R) x 1 Audio out (Mini Jack) x 1 Microphone in (Mini Jack) x 1 Speaker 10W x 2 USB (Type mini B) x 1 (Download & page/down) RJ45 x 1 (LAN Control & LAN Display) RS232 (DB-9pin) x 1 DC 12V Trigger (3.5mm Jack) x 1 IR Receiver x 2
Dimensions (WxHxD)	13.3" x 4.7" x 9.4"
Weight	8.4 lbs (3.8kg)
Power Supply	AC100 to 240V, 4.5A, 50 to 60 Hz
Power Consumption	398W(Max), Standby<0.5W
Audible Noise	36/32 dBA (Normal/Economic mode)
On-Screen Display Languages	Arabic/Bulgarian/ Croatian/ Czech/ Danish/ Dutch/ English/ Finnish/ French/ German/ Greek/ Hindi/ Hungarian/ Italian/ Indonesian/ Japanese/ Korean/ Norwegian/ Polish/ Portuguese/ Romanian/ Russian/ Simplified Chinese/Spanish/ Swedish/ Turkish/ Thai/ Traditional Chinese (28 Languages)
Picture Modes	Dynamic/Presentation/sRGB/Cinema/User 1/User 2
Accessories (Standard)	Lens Cover, Remote Control w/ Battery, Power Cord, User Manual CD, Quick Start Guide, Warranty Card, Carry bag, VGA(D-sub 15pin) Cable
Accessories (Optional)	Spare Lamp Kit P/N: 5J.J6N05.001 Ceiling Mount P/N: 5J.J4N10.001 3D Glasses P/N: 5J.J7L25.002
UPC Code / Part #	8400460-2495-6 / 9H.J6N77.16A
Limited Warranty	3-Year Parts & Labor / 1-Year or 2000 hours of lamp life

*Lamp life results will vary depending on environmental conditions and usage. Actual product's features and specifications are subject to change without notice.

MX722 10-15-14-BQus

BenQ America Corp.
www.BenQ.us

BenQ is a registered trademark of BenQ Corp. DLP® is a registered trademark of Texas Instruments. All rights reserved. Product names, logos, brands, and other trademarks featured or referred to in this material are the property of their respective trademark holders. Specifications subject to change without notice.

Because it matters

MX722 Digital Projector

Distance Chart

Screen Size				Distance from screen (inch)			Vertical offset (inch)
Diagonal		W (inch)	H (inch)	Min length (Max zoom)	Average	Min length (Max zoom)	
Inch	mm						
40	1016	32	24	48.5	55.7	62.9	1.81
50	1270	40	30	60.5	30.2	78.7	2.2
60	1524	48	36	72.6	83.9	94.4	2.7
70	1778	56	42	84.8	97.5	110.2	3.1
80	2032	64	48	96.9	111.4	125.9	3.5
90	2286	72	54	109.0	125.3	141.7	4.1
100	2540	80	60	121.1	139.2	157.4	4.4
120	3048	96	72	145.3	167.1	188.9	5.4
150	3810	120	90	181.7	208.9	236.2	6.7
200	5080	160	120	242.3	278.6	314.9	9.1
250	6350	200	150	302.8	348.2	393.7	11.3
300	7620	240	180	363.4	417.9	472.4	13.5

The screen aspect ratio is 4:3 and the projected picture is 4:3

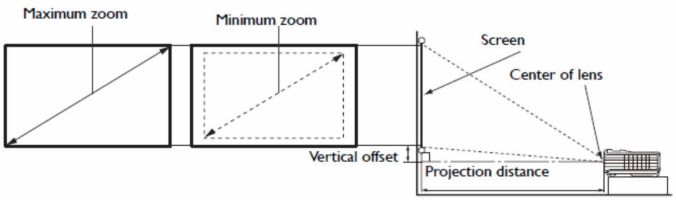

Wall Mount Chart

Ceiling Mount screw: M4
(Max L = 25 mm; Min L = 20 mm)

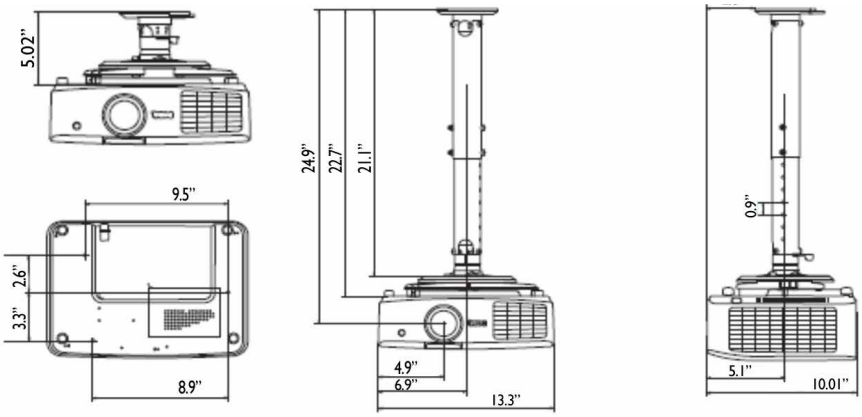

Unit: inch

Dimensions

Because it matters