PU9730 / PW9620 / PX9710
Digital Projector
Installation Guide

English

Table of Contents

Product information

Type: DLP™ Technology
Dimensions (W x H x D): 510 x 230 x 540 mm
Weight: 21 kg (46.3 lbs)

Specifications	PX9710	PW9630	PU9730
DMD size	0.7”	0.65"	0.67”
Native resolution	XGA (1024 x 768)	WXGA (1280 x 800)	WUXGA (1920 x 1200)
Aspect ratio	4:3	16:10	16:10
Brightness	7700 Lumens	6700 Lumens	7000 Lumens
Lamp Wattage	350W x2		
Power consumption(Max)	880W		

Lens information

Model Name	Lens Type	BenQ Part Number	Optical spec	Screen Size
LS1ST3	Wide fix	5J.JAM37.011	F=1.85, f=11.6mm	40”~500”
LS1ST2	Ultra wide	5J.JAM37.061	F=1.96-2.3	40”~500”
LS1ST1	Wide zoom	5J.JAM37.021	F=1.85~2.5, f=18.7~26.5mm	40”~500”
LS1SD	Standard	5J.JAM37.001	F=1.64~1.86, f=26~34mm	40”~500”
LS1LT1	Semi Long	5J.JAM37.051	F=1.86~2.48, f=32.9~54.2mm	40”~500”
LS1LT2	Long zoom 1	5J.JAM37.031	F=1.86~2.41, f=52.8~79.1mm	40”~500”
LS1LT3	Long zoom 2	5J.JAM37.041	F=1.85~2.48, f=78.5~121.9mm	40”~500”

Notice (when edge blending)

- To avoid the image shaking or some pixels in the display may be misaligned, do not use the projector in the following location:
  - In a building close to a construction site.
  - In a room where an air conditioner unit is working and it vibrates.
  - In a place where the temperature changes dramatically that may cause thermal contraction.
- Before making any adjustment, leave the projector lit for at least 45 minutes after its lamp is turned on. This allows the internal temperature of the projector to stabilize.

Product information

PX9710 Formulas:

Definitions:
W = Image Width
H = Image Height (size)
C = Throw distance

4:3 Screen Formulas:
W = H x 4/3
H = W x 3/4
Diagonal = W x 5/4

PX9710

Part Number						5J.JAM37.011		5J.JAM37.021				5J.JAM37.001				5J.JAM37.051			
						LS1ST3 (Wide Fix Lens)		LS1ST1 (Wide Zoom Lens)				LS1SD (Standard Lens)				LS1LT1 (Semi Long Lens)			
Throw Ratio						0.79		1.31~1.85				1.79~2.35				2.33~3.81			
Diagonal		Width		Height (B)		N/A		Wide		Tele		Wide		Tele		Wide		Tele	
(inch)	(m)	(inch)	(m)	(inch)	(m)	(inch)	(m)	(inch)	(m)	(inch)	(m)	(inch)	(m)	(inch)	(m)	(inch)	(m)	(inch)	(m)
40	1.02	32	0.81	24	0.61	24.5	0.62	40.4	1.03	58.5	1.49	55.8	1.42	74.1	1.88	71.9	1.83	121.3	3.08
50	1.27	40	1.02	30	0.76	31.0	0.79	51.0	1.30	73.6	1.87	70.4	1.79	93.2	2.37	90.7	2.30	152.4	3.87
60	1.52	48	1.22	36	0.91	37.6	0.96	61.6	1.57	88.8	2.25	85.1	2.16	112.4	2.86	109.5	2.78	183.5	4.66
80	2.03	64	1.63	48	1.22	50.8	1.29	82.9	2.11	119.0	3.02	114.3	2.90	150.8	3.83	147.0	3.73	245.7	6.24
100	2.54	80	2.03	60	1.52	63.9	1.62	104.1	2.65	149.2	3.79	143.5	3.65	189.1	4.80	184.6	4.69	307.9	7.82
120	3.05	96	2.44	72	1.83	77.1	1.96	125.4	3.18	179.4	4.56	172.8	4.39	227.4	5.78	222.1	5.64	370.1	9.40
150	3.81	120	3.05	90	2.29	96.8	2.46	157.3	3.99	224.8	5.71	216.7	5.50	285.0	7.24	278.4	7.07	463.4	11.77
180	4.57	144	3.66	108	2.74	116.6	2.96	189.1	4.80	270.1	6.86	260.5	6.62	342.5	8.70	334.8	8.50	556.7	14.14
200	5.08	160	4.06	120	3.05	129.7	3.30	210.4	5.34	300.3	7.63	289.8	7.36	380.8	9.67	372.3	9.46	618.9	15.72
300	7.62	240	6.1	180	4.57	195.5	4.97	316.6	8.04	451.5	11.47	436.0	11.07	572.6	14.54	560.0	14.23	930.0	23.62
400	10.16	320	8.13	240	6.1	261.3	6.64	422.9	10.74	602.6	15.31	582.2	14.79	764.3	19.41	747.8	18.99	1241.0	31.52
500	12.70	400	10.16	300	7.62	327.1	8.31	529.1	13.44	753.7	19.14	728.5	18.50	956.1	24.28	935.5	23.76	1552.0	39.42

Part Number						5J.JAM37.031				5J.JAM37.041				5J.JAM37.061			
						LS1LT2 (Long Zoom 1 Lens)				LS1LT3 (Long Zoom 2 Lens)				LS1ST2 (Ultra Wide Lens)			
Throw Ratio						3.71~5.57				5.5~8.56				0.77~0.97			
Diagonal		Width		Height (B)		Wide		Tele		Wide		Tele		Wide		Tele	
(inch)	(m)	(inch)	(m)	(inch)	(m)	(inch)	(m)	(inch)	(m)	(inch)	(m)	(inch)	(m)	(inch)	(m)	(inch)	(m)
40	1.02	32	0.81	24	0.61	115.9	2.94	176.8	4.49	169.6	4.31	271.2	6.89	23.9	0.61	30.4	0.77
50	1.27	40	1.02	30	0.76	146.2	3.71	222.3	5.65	215.0	5.46	341.9	8.68	30.3	0.77	38.4	0.98
60	1.52	48	1.22	36	0.91	176.5	4.48	267.9	6.80	260.3	6.61	412.6	10.48	36.7	0.93	46.5	1.18
80	2.03	64	1.63	48	1.22	237.1	6.02	358.9	9.12	350.9	8.91	554.0	14.07	49.5	1.26	62.5	1.59
100	2.54	80	2.03	60	1.52	297.7	7.56	450.0	11.43	441.6	11.22	695.3	17.66	62.4	1.58	78.6	2.00
120	3.05	96	2.44	72	1.83	358.2	9.10	541.0	13.74	532.2	13.52	836.7	21.25	75.2	1.91	94.7	2.40
150	3.81	120	3.05	90	2.29	449.1	11.41	677.6	17.21	668.2	16.97	1048.8	26.64	94.4	2.40	118.8	3.02
180	4.57	144	3.66	108	2.74	540.0	13.72	814.2	20.68	804.1	20.42	1260.9	32.03	113.7	2.89	142.9	3.63
200	5.08	160	4.06	120	3.05	600.6	15.26	905.3	22.99	894.8	22.73	1402.2	35.62	126.5	3.21	158.9	4.04
300	7.62	240	6.1	180	4.57	903.6	22.95	1360.5	34.56	1348.0	34.24	2109.1	53.57	190.7	4.84	239.2	6.08
400	10.16	320	8.13	240	6.1	1206.6	30.65	1815.8	46.12	1801.2	45.75	2816.0	71.53	254.9	6.47	319.5	8.12
500	12.70	400	10.16	300	7.62	1509.5	38.34	2271.1	57.69	2254.3	57.26	3522.9	89.48	319.1	8.10	399.9	10.16

PW9620 Formulas:

Definitions:
W = Image Width
H = Image Height (size)
C = Throw distance

16:10 Screen Formulas:
W = H x 16/10
H = W x 10/16
Screen Diagonal = W x 18.868/16

PW9620

Part Number						5J.JAM37.011		5J.JAM37.021				5J.JAM37.001				5J.JAM37.051			
						LS1ST3 (Wide Fix Lens)		LS1ST1 (Wide Zoom Lens)				LS1SD (Standard Lens)				LS1LT1 (Semi Long Lens)			
Throw Ratio						0.8		1.31~1.87				1.81~2.38				2.33~3.86			
Diagonal		Width		Height (B)		N/A		Wide		Tele		Wide		Tele		Wide		Tele	
(inch)	(m)	(inch)	(m)	(inch)	(m)	(inch)	(m)	(inch)	(m)	(inch)	(m)	(inch)	(m)	(inch)	(m)	(inch)	(m)	(inch)	(m)
40	1.02	34	0.86	21	0.54	26.4	0.67	43.6	1.11	63.1	1.60	60.2	1.53	79.8	2.03	77.6	1.97	130.5	3.31
50	1.27	42	1.08	26	0.67	33.5	0.85	55.0	1.40	79.3	2.01	75.9	1.93	100.4	2.55	97.8	2.48	163.9	4.16
60	1.52	51	1.29	32	0.81	40.5	1.03	66.4	1.69	95.5	2.43	91.7	2.33	121.0	3.07	117.9	3.00	197.3	5.01
80	2.03	68	1.72	42	1.08	54.7	1.39	89.3	2.27	128.0	3.25	123.1	3.13	162.3	4.12	158.3	4.02	264.1	6.71
100	2.54	85	2.15	53	1.35	68.8	1.75	112.1	2.85	160.5	4.08	154.5	3.93	203.5	5.17	198.7	5.05	330.9	8.41
120	3.05	102	2.58	64	1.62	82.9	2.11	135.0	3.43	193.0	4.90	186.0	4.72	244.7	6.22	239.0	6.07	397.7	10.10
150	3.81	127	3.23	79	2.02	104.1	2.64	169.2	4.30	241.7	6.14	233.1	5.92	306.5	7.79	299.6	7.61	498.0	12.65
180	4.57	153	3.88	95	2.42	125.3	3.18	203.5	5.17	290.4	7.38	280.3	7.12	368.4	9.36	360.1	9.15	598.2	15.19
200	5.08	170	4.31	106	2.69	139.4	3.54	226.4	5.75	322.9	8.20	311.7	7.92	409.6	10.40	400.5	10.17	665.0	16.89
300	7.62	254	6.46	159	4.04	210.0	5.33	340.6	8.65	485.3	12.33	468.9	11.91	615.7	15.64	602.3	15.30	999.0	25.38
400	10.16	339	8.62	212	5.38	280.6	7.13	454.8	11.55	647.7	16.45	626.1	15.90	821.9	20.88	804.1	20.42	1333.1	33.86
500	12.70	424	10.77	265	6.73	351.2	8.92	569.0	14.45	810.1	20.58	783.3	19.90	1028.0	26.11	1005.9	25.55	1667.1	42.35

Part Number						5J.JAM37.031				5J.JAM37.041				5J.JAM37.061			
						LS1LT2 (Long Zoom 1 Lens)				LS1LT3 (Long Zoom 2 Lens)				LS1ST2 (Ultra Wide Lens)			
Throw Ratio						3.76~5.64				5.56~8.67				0.78~0.98			
Diagonal		Width		Height (B)		Wide		Tele		Wide		Tele		Wide		Tele	
(inch)	(m)	(inch)	(m)	(inch)	(m)	(inch)	(m)	(inch)	(m)	(inch)	(m)	(inch)	(m)	(inch)	(m)	(inch)	(m)
40	1.02	34	0.86	21	0.54	124.9	3.17	190.3	4.83	183.3	4.65	292.2	7.42	25.8	0.65	32.8	0.83
50	1.27	42	1.08	26	0.67	157.5	4.00	239.2	6.08	232.0	5.89	368.1	9.35	32.7	0.83	41.4	1.05
60	1.52	51	1.29	32	0.81	190.1	4.83	288.1	7.32	280.7	7.13	444.0	11.28	39.6	1.00	50.0	1.27
80	2.03	68	1.72	42	1.08	255.2	6.48	385.9	9.80	378.1	9.60	595.9	15.13	53.3	1.35	67.3	1.71
100	2.54	85	2.15	53	1.35	320.3	8.14	483.7	12.29	475.6	12.08	747.7	18.99	67.1	1.70	84.5	2.15
120	3.05	102	2.58	64	1.62	385.5	9.79	581.5	14.77	573.0	14.55	899.6	22.85	80.9	2.05	101.8	2.59
150	3.81	127	3.23	79	2.02	483.2	12.27	728.2	18.50	719.1	18.27	1127.3	28.63	101.6	2.58	127.6	3.24
180	4.57	153	3.88	95	2.42	580.9	14.75	874.9	22.22	865.3	21.98	1355.1	34.42	122.2	3.10	153.5	3.90
200	5.08	170	4.31	106	2.69	646.0	16.41	972.7	24.71	962.7	24.45	1506.9	38.28	136.0	3.45	170.8	4.34
300	7.62	254	6.46	159	4.04	971.7	24.68	1461.8	37.13	1449.9	36.83	2266.2	57.56	204.9	5.20	257.0	6.53
400	10.16	339	8.62	212	5.38	1297.3	32.95	1950.8	49.55	1937.1	49.20	3025.4	76.85	273.8	6.95	343.2	8.72
500	12.70	424	10.77	265	6.73	1623.0	41.22	2439.8	61.97	2424.2	61.58	3784.7	96.13	342.7	8.70	429.4	10.91

PU9730 Formulas:

Definitions:

W = Image Width

H = Image Height (size)

C = Throw distance

16:10 Screen Formulas:

W = H x 16/10

H = W x 10/16

Screen Diagonal = W x 18.868/16

PU9730

Part Number						5J.JAM37.011		5J.JAM37.021				5J.JAM37.001				5J.JAM37.051			
						LS1ST3 (Wide Fix Lens)		LS1ST1 (Wide Zoom Lens)				LS1SD (Standard Lens)				LS1LT1 (Semi Long Lens)			
Throw Ratio						0.76		1.25~1.79				1.73~2.27				2.22~3.67			
Diagonal		Width		Height (B)		N/A		Wide		Tele		Wide		Tele		Wide		Tele	
(inch)	(m)	(inch)	(m)	(inch)	(m)	(inch)	(m)	(inch)	(m)	(inch)	(m)	(inch)	(m)	(inch)	(m)	(inch)	(m)	(inch)	(m)
40	1.02	34	0.86	21	0.54	25.1	0.64	41.4	1.05	59.9	1.52	57.2	1.45	75.8	1.93	73.6	1.87	124.1	3.15
50	1.27	42	1.08	26	0.67	31.8	0.81	52.3	1.33	75.4	1.92	72.1	1.83	95.5	2.42	92.9	2.36	155.9	3.96
60	1.52	51	1.29	32	0.81	38.5	0.98	63.1	1.60	90.9	2.31	87.1	2.21	115.1	2.92	112.1	2.85	187.8	4.77
80	2.03	68	1.72	42	1.08	52.0	1.32	84.9	2.16	121.8	3.09	117.0	2.97	154.3	3.92	150.5	3.82	251.4	6.39
100	2.54	85	2.15	53	1.35	65.5	1.66	106.6	2.71	152.7	3.88	147.0	3.73	193.5	4.92	188.9	4.80	315.0	8.00
120	3.05	102	2.58	64	1.62	78.9	2.01	128.4	3.26	183.6	4.66	176.9	4.49	232.8	5.91	227.6	5.78	378.6	9.62
150	3.81	127	3.23	79	2.02	99.1	2.52	161.0	4.09	230.0	5.84	221.8	5.63	291.6	7.41	285.0	7.24	474.1	12.04
180	4.57	153	3.88	95	2.42	119.3	3.03	193.6	4.92	276.4	7.02	266.7	6.77	350.5	8.90	342.6	8.70	569.5	14.47
200	5.08	170	4.31	106	2.69	132.8	3.37	215.3	5.47	307.3	7.81	296.6	7.53	389.7	9.90	381.0	9.68	633.1	16.08
300	7.62	254	6.46	159	4.04	200.1	5.08	324.0	8.23	461.9	11.73	446.3	11.34	585.9	14.9	573.2	14.56	951.2	24.16
400	10.16	339	8.62	212	5.38	267.4	6.79	432.7	10.99	616.6	15.66	595.9	15.14	782.3	19.87	765.3	19.44	1269.7	32.25
500	12.70	424	10.77	265	6.73	334.8	8.50	541.5	13.75	771.2	19.59	745.6	18.94	978.3	24.85	957.4	24.32	1587.8	40.33

Part Number						5J.JAM37.031				5J.JAM37.041				5J.JAM37.061			
						LS1LT2 (Long Zoom 1 Lens)				LS1LT3 (Long Zoom 2 Lens)				LS1ST2 (Ultra Wide Lens)			
Throw Ratio						3.58~5.38				5.31~8.26				0.75~0.93			
Diagonal		Width		Height (B)		Wide		Tele		Wide		Tele		Wide		Tele	
(inch)	(m)	(inch)	(m)	(inch)	(m)	(inch)	(m)	(inch)	(m)	(inch)	(m)	(inch)	(m)	(inch)	(m)	(inch)	(m)
40	1.02	34	0.86	21	0.54	118.7	3.01	181.0	4.60	173.9	4.42	277.7	7.05	24.5	0.62	31.1	0.79
50	1.27	42	1.08	26	0.67	149.7	3.80	227.6	5.78	220.2	5.59	350.0	8.89	31.1	0.79	39.2	1.00
60	1.52	51	1.29	32	0.81	180.7	4.59	274.1	6.96	266.6	6.77	422.3	10.73	37.6	0.96	47.4	1.20
80	2.03	68	1.72	42	1.08	242.7	6.16	367.3	9.33	359.4	9.13	567.0	14.40	50.8	1.29	63.8	1.62
100	2.54	85	2.15	53	1.35	304.3	7.73	460.4	11.70	452.1	11.48	711.6	18.07	63.9	1.62	80.2	2.04
120	3.05	102	2.58	64	1.62	366.7	9.31	553.6	14.06	544.9	13.84	856.2	21.75	77.1	1.96	96.6	2.45
150	3.81	127	3.23	79	2.02	459.4	11.67	693.3	17.61	684.0	17.37	1073.1	27.26	96.8	2.46	121.1	3.08
180	4.57	153	3.88	95	2.42	552.4	14.03	833.0	21.16	823.1	20.91	1290.1	32.77	116.5	2.96	145.7	3.70
200	5.08	170	4.31	106	2.69	614.7	15.6	926.4	23.53	915.9	23.26	1434.7	36.44	129.7	3.29	162.1	4.12
300	7.62	254	6.46	159	4.04	924.0	23.47	1392.1	35.36	1379.6	35.04	2157.8	54.81	195.4	4.96	244.0	6.20
400	10.16	339	8.62	212	5.38	1233.9	31.34	1857.9	47.19	1843.3	46.82	2880.9	73.18	261.2	6.63	325.9	8.28
500	12.70	424	10.77	265	6.73	1543.7	39.21	2323.6	59.02	2307.1	58.60	3604.0	91.54	326.9	8.30	407.7	10.36

Note:

- Ceiling installation must be done by a qualified professional. Contact your dealer for more information. It is not recommended you install the projector yourself.
- Only use the projector on a solid, level surface. Serious injury and damage can occur if the projector is dropped.
- Do not use the projector in an environment where extreme temperature occurs. The projector must be used at temperatures between 41 degrees Fahrenheit (5 degrees Celsius) and 104 degrees Fahrenheit (40 degrees Celsius).
- Screen damage will occur if the projector is exposed to moisture, dust or smoke.
- Do not cover the vents on the projector. Proper ventilation is required to dissipate heat. Damage to the projector will occur if the vents are covered.

Lens shift range

Lens shift adjustable range

The adjustable range for lens shift is tabulated below and subject to the conditions listed.

Note:

The drawings below apply to the standard lens only.

Desk-Front Projection

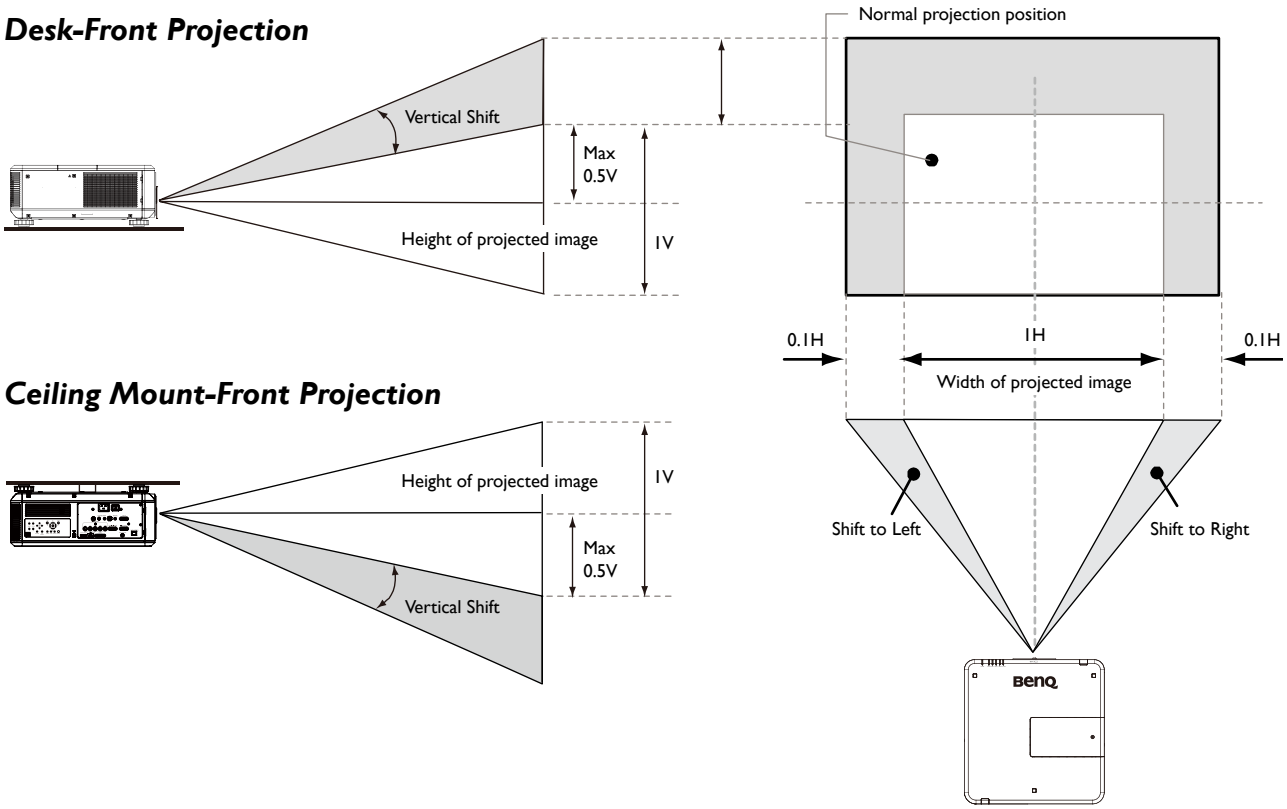

Ceiling Mount-Front Projection

Ceiling Mount Installation

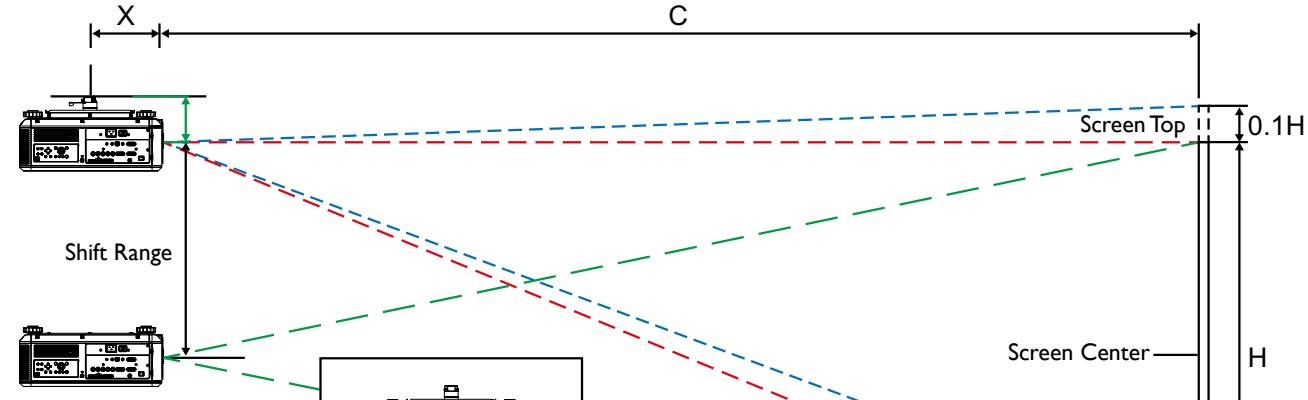

Only for Lenses:
LS1ST3: X = 257.9
LS1ST2: X = 287
LS1ST1: X = 264
LS1SD: X = 238.3
LS1LT1: X = 257.4
LS1LT2: X = 274.3
LS1LT3: X = 314.9

X = Distance from lens to mount center
C = Distance from lens to screen

Desktop Installation

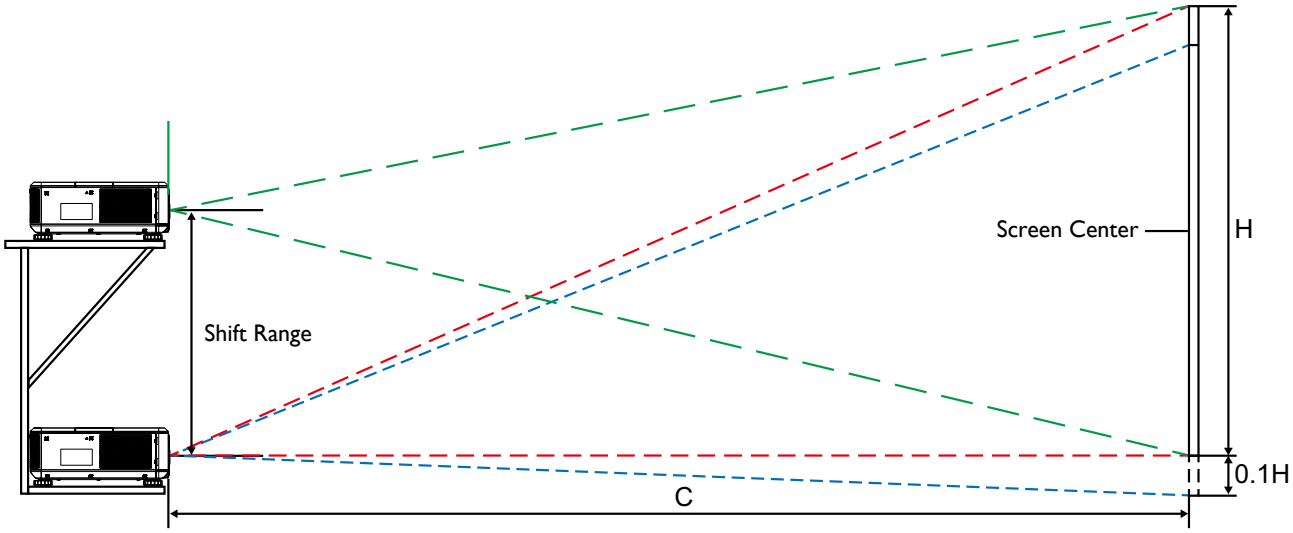

Note:

- Lens Shift feature is not available to LS1ST3 (Fix Lens). This lens should be used for "zero degree"/"no-offset" applications. See below:

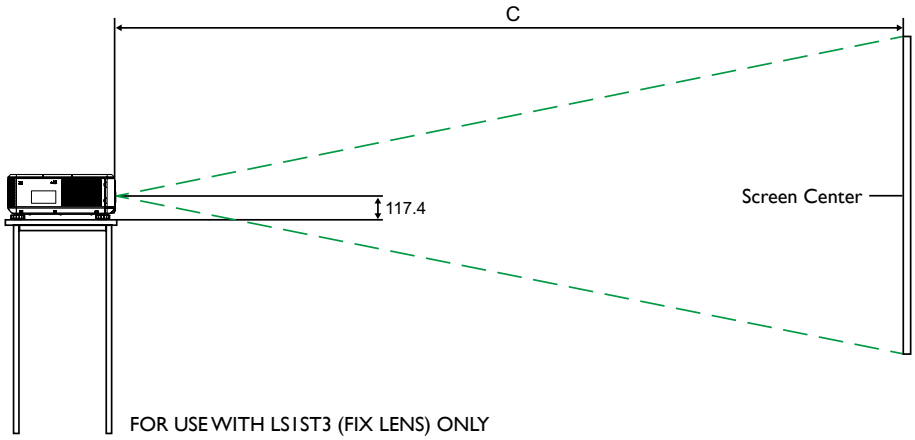

Projector dimension

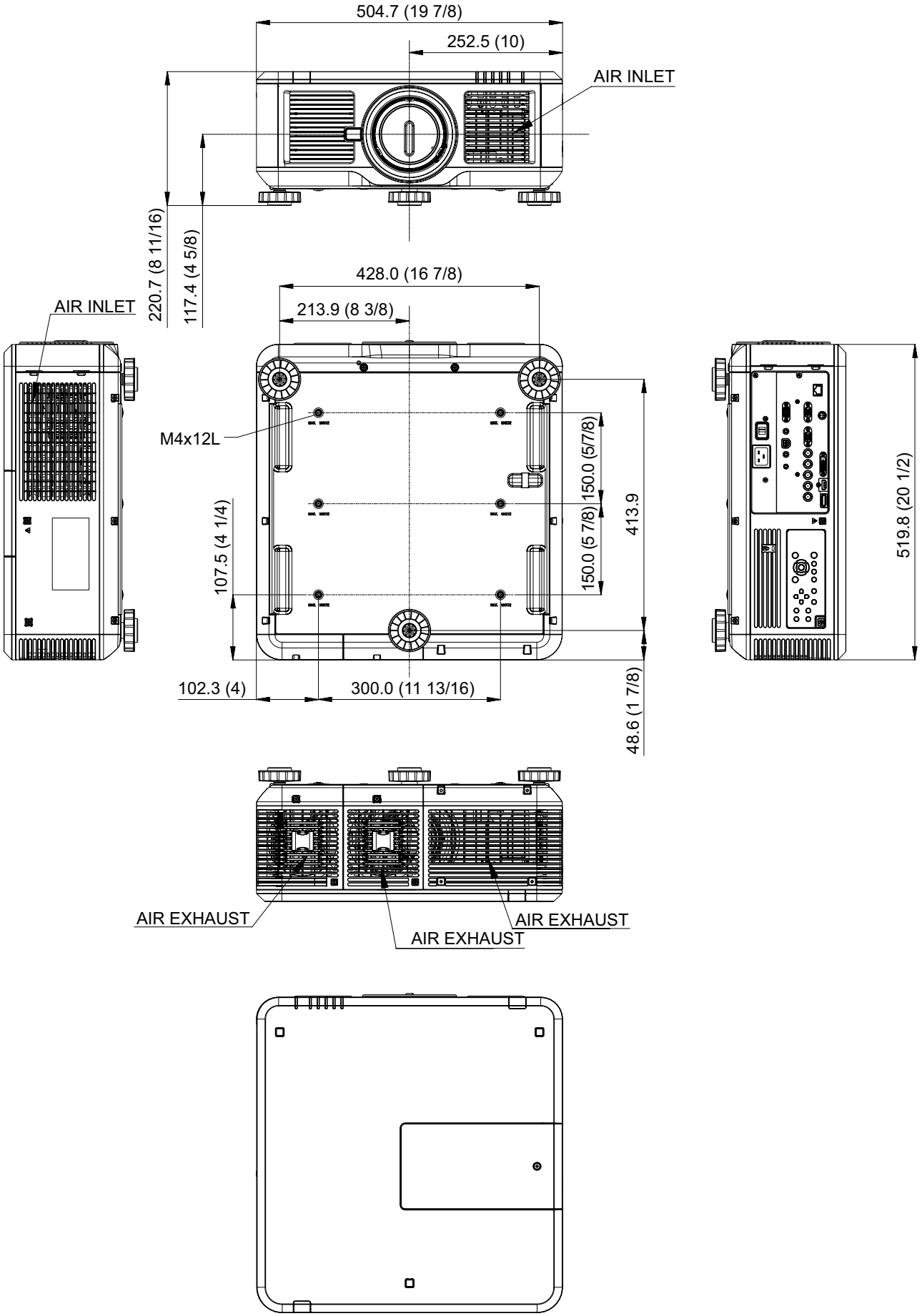

Clearance around the exhaust vent

For proper ventilation of the projector, make sure to leave some space around the projector as shown in the illustration below:

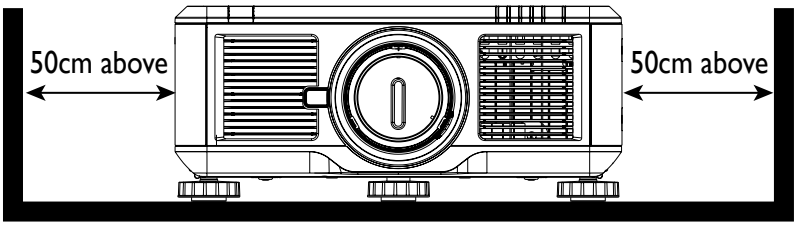

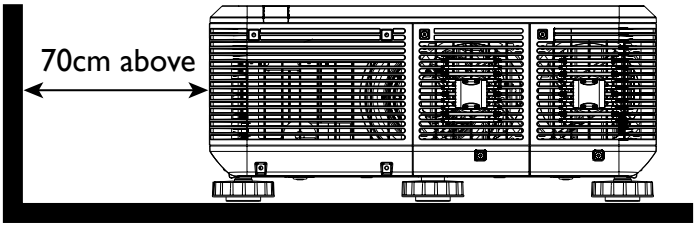

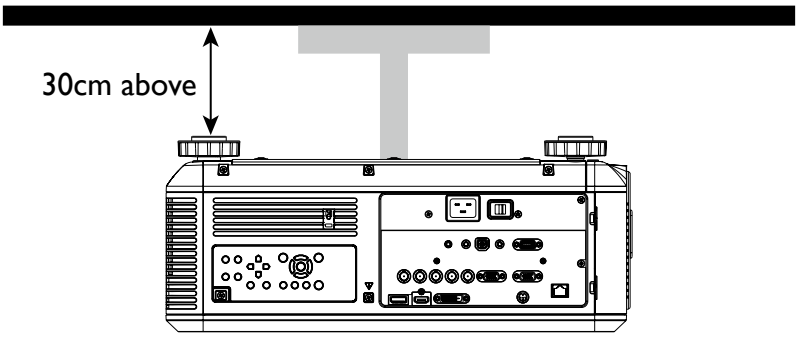

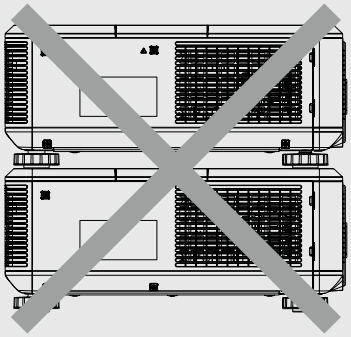

Do not place another projector on the top of the projector.

Lens dimension

Optional Lens (Wide Fix: LS1ST3)

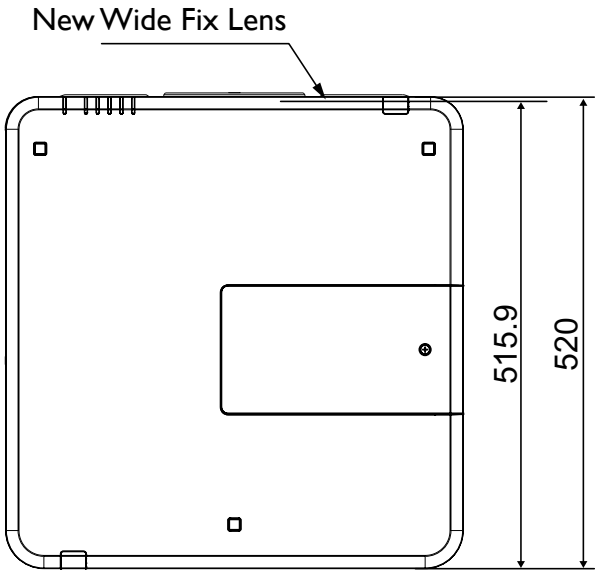

Optional Lens (Wide Zoom: LS1ST1)

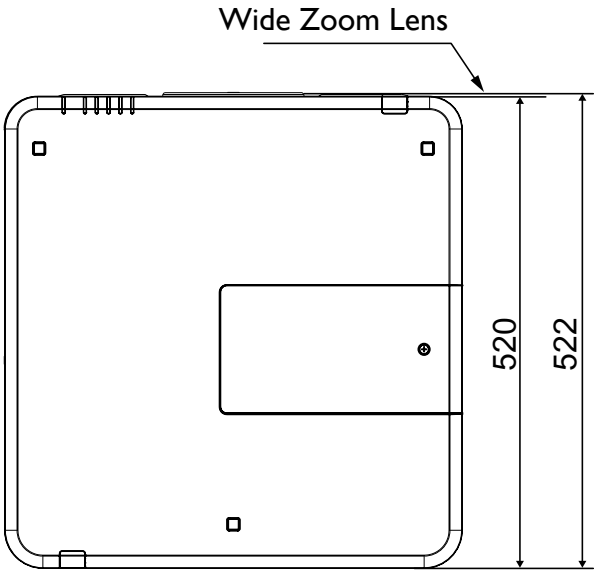

Optional Lens (Ultra Wide: LS1ST2)

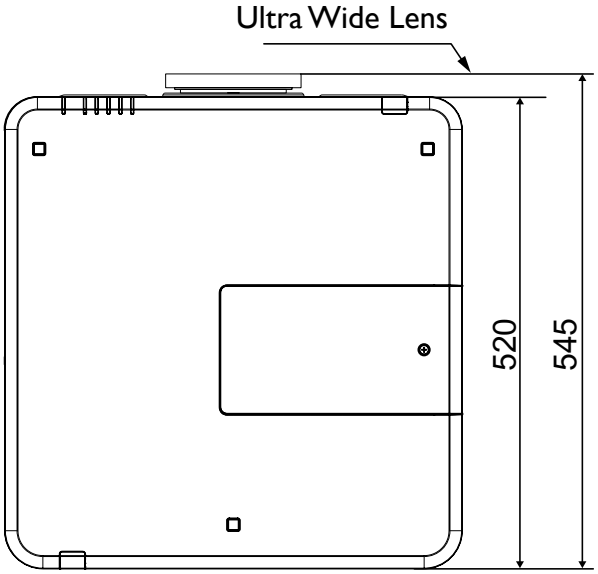

Optional Lens (Standard: LS1SD)

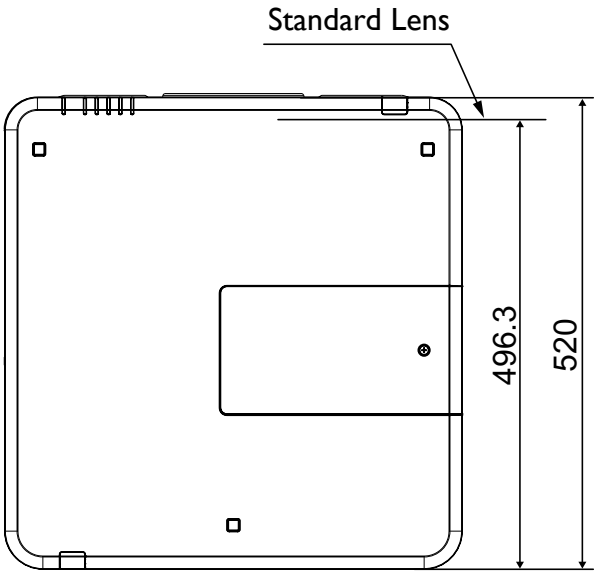

Optional Lens (Semi Long Throw: LS1LT1)

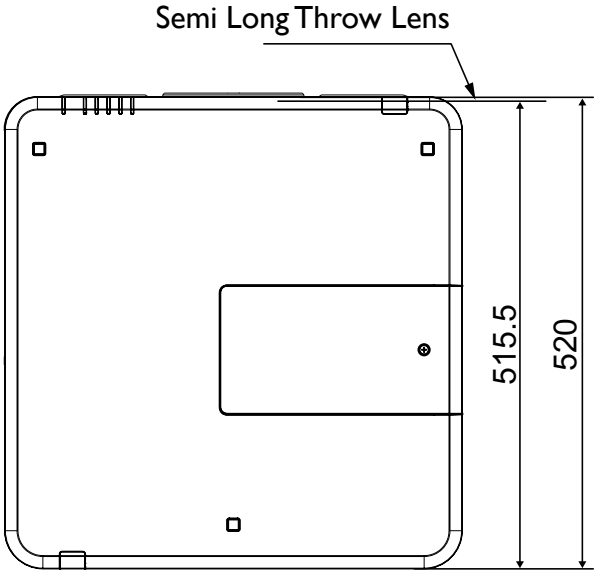

Optional Lens (Long Throw 1: LS1LT2)

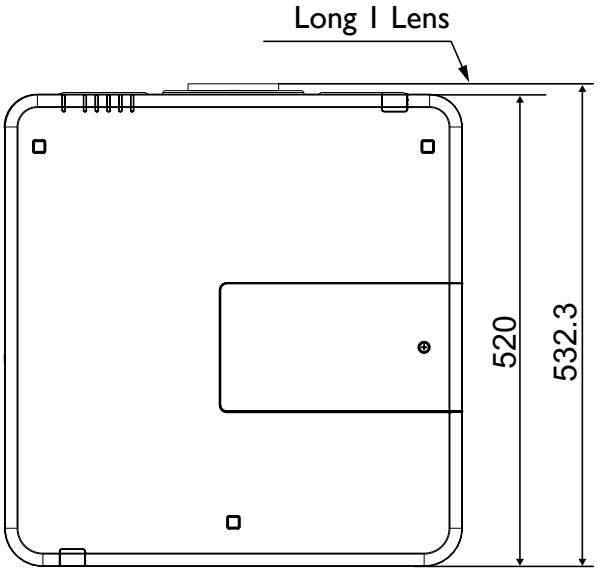

Optional Lens (Long Throw 2: LS1LT3)

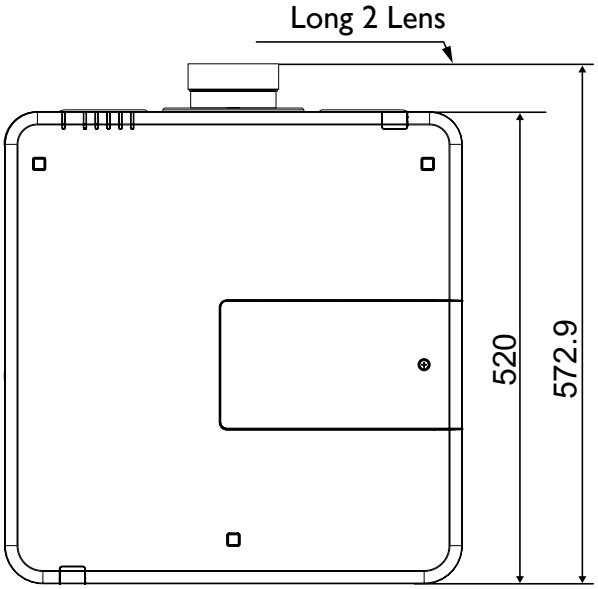

Ceiling mount dimension

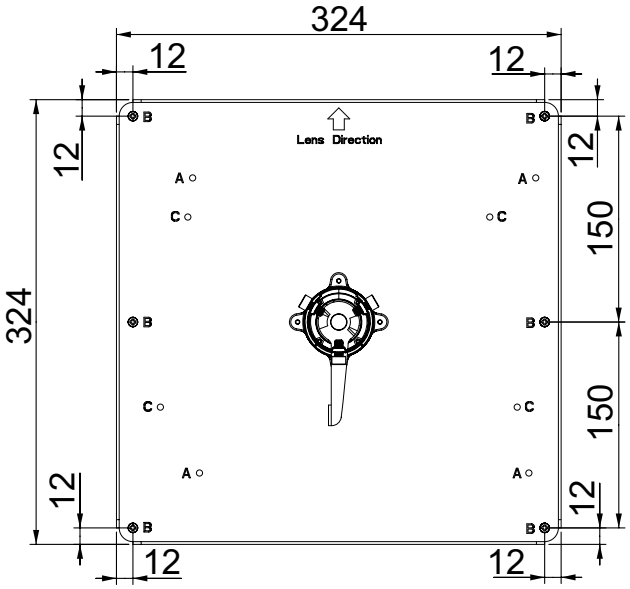

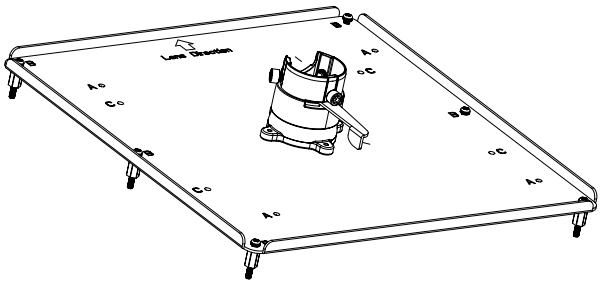

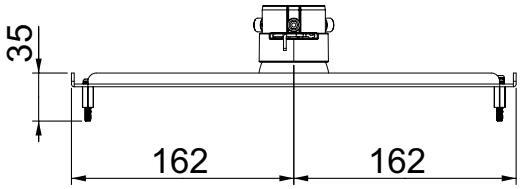

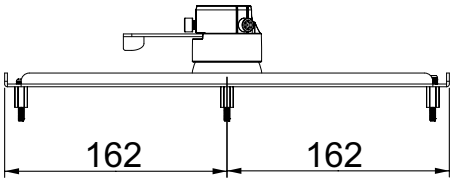

Ceiling Mount (Part Number: 5J.JCY10.001)

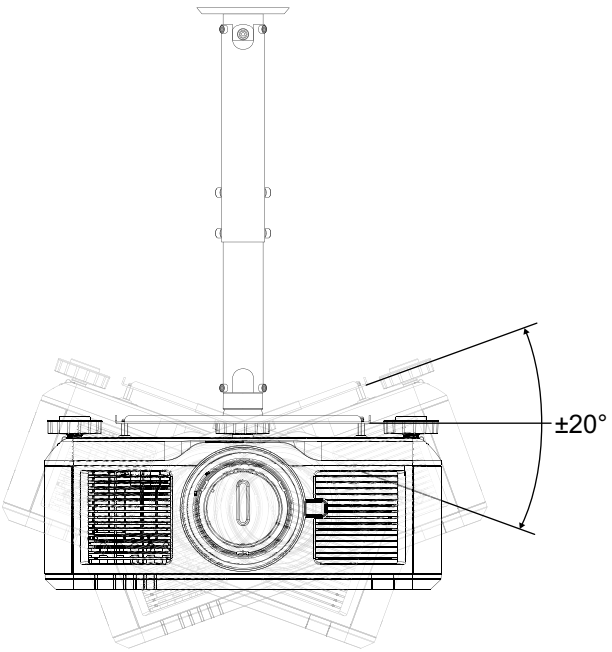

Note:

- Mark A: PW9500/PX9600
- Mark B: PU9730/PX9710/PW9620
- Mark C: PX9210/PU9220

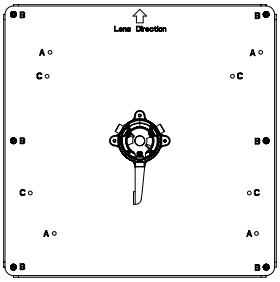

IO panel

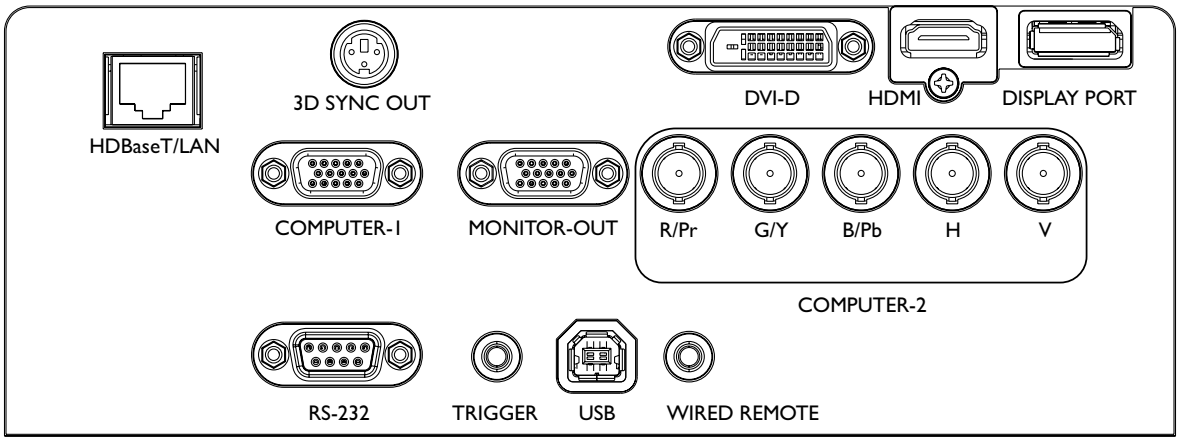

- **HDBaseT/LAN**
  For connection to RJ45 Cat5/Cat6 Ethernet cable to input uncompressed high-definition video (HD), control signals.
- **3D Sync Out**
  Connection to 3D IR sync signal transmitter.
- **DVI-D**
  Connection to DVI source.
- **HDMI**
  Connection to HDMI source.
- **DisplayPort**
  Connection to device or PC featuring DisplayPort.
- **Copmuter-1**
  15-pin VGA port for connection to RGB, component HD source, or PC.
- **Monitor Out**
  Connection to other display equipment for concurrent playback display.
- **Computer-2 (R/Pr, G/Y, B/Pb, H,V)**
  Connection to RGB or YPbPr/YCbCr output signal with BNC type input terminal.
- **RS-232**
  Standard 9-pin D-sub interface for connection to PC control system and projector maintenance.
- **TRIGGER**
  3.5mm mini earphone jack, employs 350mA display relay to provide 12(+/-1.5)V output and short circuit protection.
- **USB**
  Maintenance exclusive port for authorized maintenance personnel only.
- **Wired Remote**
  Connection to input Niles or Xantech compatible IR repeater system.

Caution:

Make sure the port is valid before inserting a wired remote controller. The remote controller may be damaged in case of an invalid port, e.g. a wired remote controller is connected to trigger output.

RS232 command

RS232 pin assignment

No.	Serial
1	N.C
2	RXD
3	TXD
4	N.C
5	Ground

No.	Serial
6	N.C
7	Short with pin8
8	Short with pin7
9	N.C

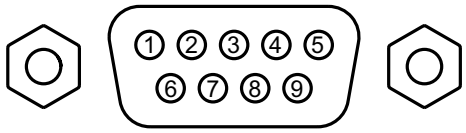

Function	Type	Description	ASCII
Power	Write	Power On	<CR>*pow=on#<CR>
	Write	Power off	<CR>*pow=off#<CR>
	Read	Power Status	<CR>*pow=?#<CR>
Source Selection	Write	COMPUTER/YPbPr	<CR>*sour=RGB#<CR>
	Write	COMPUTER 2/YPbPr2	<CR>*sour=RGB2#<CR>
	Write	DVI-D	<CR>*sour=dvid#<CR>
	Write	HDMI	<CR>*sour=hdmi#<CR>
	Write	DisplayPort	<CR>*sour=dp#<CR>
	Write	HDBaseT	<CR>*sour=hdbaset#<CR>
	Read	Current source	<CR>*sour=?#<CR>
Picture Setting	Write	Dynamic	<CR>*appmod=dynamic#<CR>
	Write	Presentation	<CR>*appmod=preset#<CR>
	Write	Cinema	<CR>*appmod=cine#<CR>
	Read	Picture Mode	<CR>*appmod=?#<CR>
	Write	Contrast +	<CR>*con=+#<CR>
	Write	Contrast -	<CR>*con=-#<CR>

Function	Type	Description	ASCII
Picture Setting	Read	Contrast value	<CR>*con=?#<CR>
	Write	Brightness +	<CR>*bri=+#<CR>
	Write	Brightness -	<CR>*bri=-#<CR>
	Read	Brightness value	<CR>*bri=?#<CR>
	Write	Color +	<CR>*color=+#<CR>
	Write	Color -	<CR>*color=-#<CR>
	Read	Color value	<CR>*color=?#<CR>
	Write	Sharpness +	<CR>*sharp=+#<CR>
	Write	Sharpness -	<CR>*sharp=-#<CR>
	Read	Sharpness value	<CR>*sharp=?#<CR>
	Write	Color Temperature-Warm	<CR>*ct=warm#<CR>
	Write	Color Temperature-Normal	<CR>*ct=normal#<CR>
	Write	Color Temperature-Cool	<CR>*ct=cool#<CR>
	Write	Color Temperature-lamp native	<CR>*ct=native#<CR>
	Read	Color Temperature Status	<CR>*ct=?#<CR>
	Write	Aspect 4:3	<CR>*asp=4:3#<CR>
	Write	Aspect 16:9	<CR>*asp=16:9#<CR>
	Write	Aspect 16:10	<CR>*asp=16:10#<CR>
	Write	Aspect Auto	<CR>*asp=AUTO#<CR>
	Write	Aspect Real	<CR>*asp=REAL#<CR>
Picture Setting	Write	Aspect Letterbox	<CR>*asp=LBOX#<CR>
	Write	Aspect 5:4	<CR>*asp=5:4#<CR>
	Write	Aspect 1.88	<CR>*asp=1.88:1#<CR>
	Write	Aspect 2.35	<CR>*asp=2.35:1#<CR>
	Read	Aspect Status	<CR>*asp=?#<CR>
	Write	Digital Zoom In	<CR>*zoomI#<CR>
	Write	Digital Zoom out	<CR>*zoomO#<CR>
	Write	Auto	<CR>*auto#<CR>

Function	Type	Description	ASCII
Operation Settings	Write	Projector Position-Front Table	<CR>*pp=FT#<CR>
	Write	Projector Position-Rear Table	<CR>*pp=RE#<CR>
	Write	Projector Position-Rear Ceiling	<CR>*pp=RC#<CR>
	Write	Projector Position-Front Ceiling	<CR>*pp=FC#<CR>
	Write	Projector Position-up Front	<CR>*pp=UF#<CR>
	Write	Projector Position-down Front	<CR>*pp=DF#<CR>
	Read	Projector Position Status	<CR>*pp=?#<CR>
	Write	Quick auto search on	<CR>*QAS=on#<CR>
	Write	Quick auto search off	<CR>*QAS=off#<CR>
	Read	Quick auto search status	<CR>*QAS=?#<CR>
	Write	Direct Power On-on	<CR>*directpower=on#<CR>
	Write	Direct Power On-off	<CR>*directpower=off#<CR>
Operation Settings	Read	Direct Power On-Status	<CR>*directpower=?#<CR>
	Write	Standby Settings-Standard	<CR>*standbynet=standard#<CR>
	Write	Standby Settings-Eco	<CR>*standbynet=eco#<CR>
	Write	Standby Settings-Network	<CR>*standbynet=network#<CR>
	Write	2400	<CR>*baud=2400#<CR>
	Write	4800	<CR>*baud=4800#<CR>
	Write	9600	<CR>*baud=9600#<CR>
	Write	14400	<CR>*baud=14400#<CR>
	Write	19200	<CR>*baud=19200#<CR>
	Write	38400	<CR>*baud=38400#<CR>
	Write	57600	<CR>*baud=57600#<CR>
	Write	115200	<CR>*baud=115200#<CR>
	Read	Current Baud Rate	<CR>*baud=?#<CR>
Lamp Control	Read	Lamp Hour	<CR>*ltim=?#<CR>
	Read	Lamp2 Hour	<CR>*ltim2=?#<CR>
	Write	Lamp hour reset	<CR>*ltim=reset#<CR>
	Write	Lamp2 hour reset	<CR>*ltim2=reset#<CR>
	Write	Normal mode	<CR>*lampm=lnor#<CR>
	Write	Eco mode	<CR>*lampm=eco#<CR>
	Write	Dual lamp	<CR>*lammd=dual#<CR>
	Write	number 1 lamp	<CR>*lammd=num1l#<CR>
Lamp Control	Write	number 2 lamp	<CR>*lammd=num2#<CR>
	Write	Single lamp (minimum)	<CR>*lammd=single#<CR>
	Read	Current Lamp status	<CR>*lammd=?#<CR>
	Read	Lamp Mode Status	<CR>*lampm=?#<CR>

Function	Type	Description	ASCII
Miscellaneous	Read	Model Name	<CR>*modelname=?#<CR>
	Write	Blank On	<CR>*blank=on#<CR>
	Write	Blank Off	<CR>*blank=off#<CR>
	Read	Blank Status	<CR>*blank=?#<CR>
	Write	Freeze On	<CR>*freeze=on#<CR>
	Write	Freeze Off	<CR>*freeze=off#<CR>
	Read	Freeze Status	<CR>*freeze=?#<CR>
	Write	Menu On	<CR>*menu=on#<CR>
	Write	Menu Off	<CR>*menu=off#<CR>
	Read	Menu Status	<CR>*menu=?#<CR>
	Write	Up	<CR>*up#<CR>
	Write	Down	<CR>*down#<CR>
	Write	Right	<CR>*right#<CR>
	Write	Left	<CR>*left#<CR>
	Write	Enter	<CR>*enter#<CR>
	Write	3D Sync Off	<CR>*3d=off#<CR>
	Write	3D Auto	<CR>*3d=auto#<CR>
	Write	3D Sync Top Bottom	<CR>*3d=tb#<CR>
	Write	3D Sync Frame Sequential	<CR>*3d=fs#<CR>

Function	Type	Description	ASCII
Miscellaneous	Write	3D Frame packing	<CR>*3d=fp#<CR>
	Write	3D Side by side	<CR>*3d=sbs#<CR>
	Write	3D inverter disable	<CR>*3d=da#<CR>
	Write	3D inverter	<CR>*3d=iv#<CR>
	Read	3D Sync Status	<CR>*3d=?#<CR>
	Write	Remote Set	<CR>*rrset=0#<CR>
	Read	Remote Set Status	<CR>*rrset=?#<CR>
	Write	Trigger on	<CR>*trigger=on#<CR>
	Write	Trigger off	<CR>*trigger=off#<CR>
	Read	Trigger status	<CR>*trigger=?#<CR>
	Write	High Altitude mode on	<CR>*Highaltitude=on#<CR>
	Write	High Altitude mode off	<CR>*Highaltitude=off#<CR>
	Read	High Altitude mode status	<CR>*Highaltitude=?#<CR>
	Read	Error Code	<CR>*error=report#<CR>
	Write	Lens Shift Up	<CR>*lst=up#<CR>
	Write	Lens Shift Down	<CR>*lst=down#<CR>
	Write	Lens Shift Left	<CR>*lst=left#<CR>
	Write	Lens Shift Right	<CR>*lst=right#<CR>
	Write	Focus Plus	<CR>*focus=+#<CR>
	Write	Focus Minus	<CR>*focus=-#<CR>
	Write	Zoom Plus	<CR>*zoom=+#<CR>
	Write	Zoom Minus	<CR>*zoom=-#<CR>
	Write	Keystone-Vertical Decrease	<CR>*keyst=-#<CR>
	Write	Keystone-Vertical Increase	<CR>*keyst=+#<CR>
	Read	Keystone-Vertical Status	<CR>*keyst=?#<CR>

2015/ 4/ 30